# INSTALLATION GUIDE

## SLIM REAR STORAGE BOX TOPPER

UN1144B

## TOOLS REQUIRED (NOT INCLUDED)

- RATCHET
- MEASURING TAPE
- MARKER
- 9/16" SOCKET
- 9/16" WRENCH
- 7/16" WRENCH OR SOCKET
- POWER DRILL
- 9/32" DRILL BIT

## INSTALL INFO

TIME TO INSTALL THIS PRODUCT: 1 HOUR

Additional help is suggested for a few of the install steps. Compatible with all FVC Rear Door Platforms.

## BEFORE YOU START

Please inspect the product and packaging upon delivery to ensure there are no issues and that all parts and hardware are accounted for.

Contact us ASAP if anything is missing at:

support@flatlinevanco.com

# BEFORE YOU START

All Flatline Van Co products must be properly assembled and secured before attaching to your vehicle. Improper attachment could result in an automobile accident, and could cause serious bodily injury or death to you or to others involved. You are responsible for assembling and securing Flatline Van Co products to your vehicle, checking the mounting points and attachments prior to use, and regularly inspecting the products for wear and or damage. We always recommend you use a professional to install any aftermarket accessories to your vehicle. If you have no mechanical experience and are not thoroughly familiar with the installation procedures, you must have the product installed by a professional installer or other qualified persons. The responsibility is yours and must be taken seriously for everyone's safety.

# PACKAGE CONTENTS

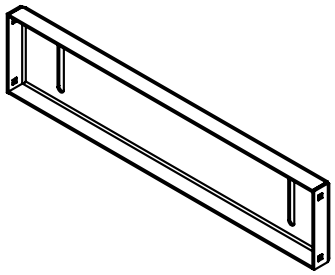

BACK PANEL

QTY: 1

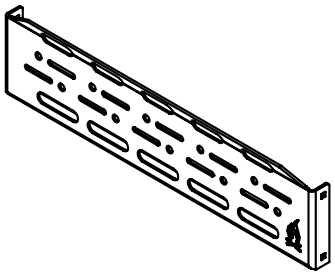

FRONT PANEL

QTY: 1

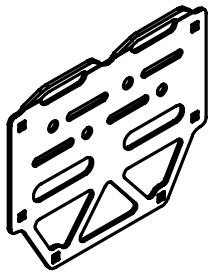

SIDE PANEL

QTY: 2

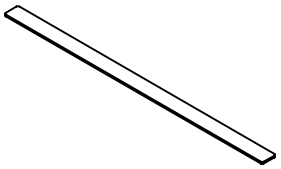

BOTTOM GASKET

QTY: 2

# HARDWARE

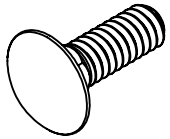

1/4-20 X 0.75 SQUARE NECK CARRIAGE BOLT

QTY: 12

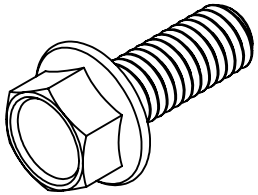

3/8-16 X 1 FLANGED HEX HEAD SCREW

QTY: 2

1/4 SCREW BONDED SEALING WASHER

QTY: 4

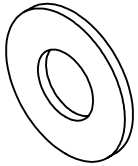

3/8 SCREW FLAT WASHER

QTY: 2

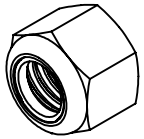

3/8 NYLON INSERT LOCKNUT

QTY: 2

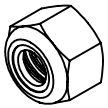

1/4-20 NYLON INSERT LOCKNUT

QTY: 12

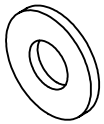

1/4 SCREW FLAT WASHER

QTY: 8

# INSTALL

TOOLS REQUIRED FOR THIS STEP:

## STEP | 01 LAYOUT AND INSTALL PREP

The **Rear Storage Box Topper** is designed to be installed on the **FVC Slim Rear Storage Box (FIG 1+2).**

**NOTE -** *This product is not interchangeable and will not work with other rear storage boxes like the **Small** and full-sized **Rear Storage Box**.*

**NOTE -** *This install can either be done with your **Storage Box** on or off the van.*

**PRO-TIP:** *If you decide to take the box off the van for this install, a table or stand of an appropriate height can be very helpful.*

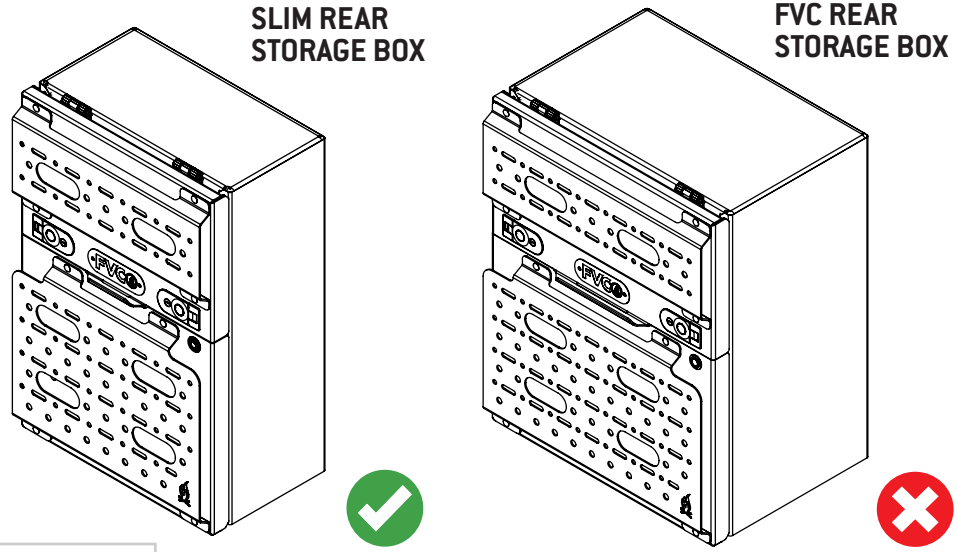


FIG 1

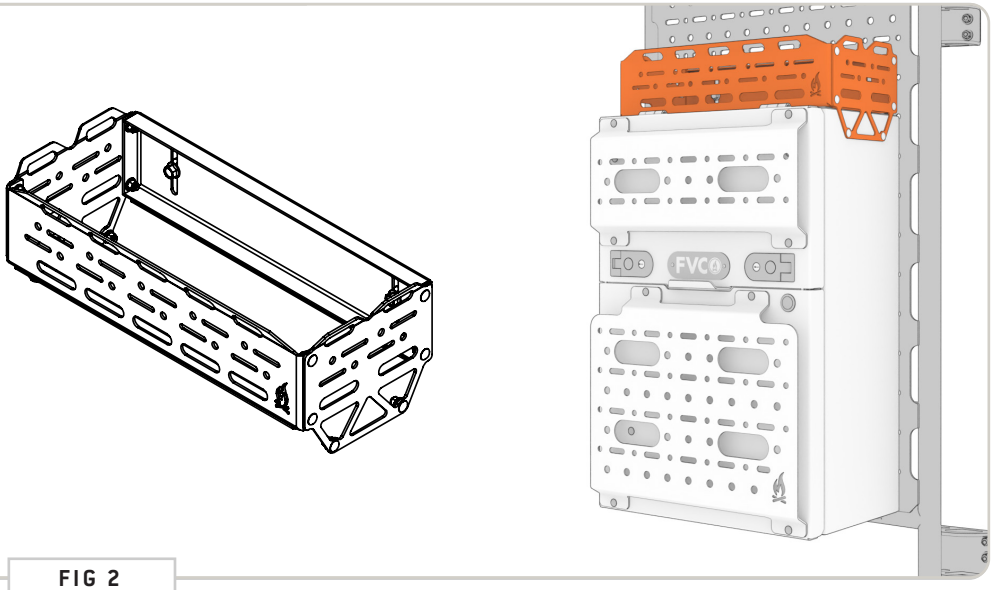

FIG 2

TOOLS REQUIRED FOR THIS STEP:

## STEP | 02 BOX TOPPER ASSEMBLY

**2.1 Position Side Panels to Rear Panel:** Position the **Side Panels** to the **Rear Panel** in the orientation as shown in **FIG 3 and 4.**

FIG 3

FIG 4

**TOOLS REQUIRED FOR THIS STEP:** + 7/16" WRENCH OR SOCKET

## STEP | 02 BOX TOPPER ASSEMBLY

**2.2 Secure Panels:** Secure the panels using the supplied **1/4-20 x0.75 Carriage Bolts, Flat Washers and Nylon Locknuts (FIG 5+6).**

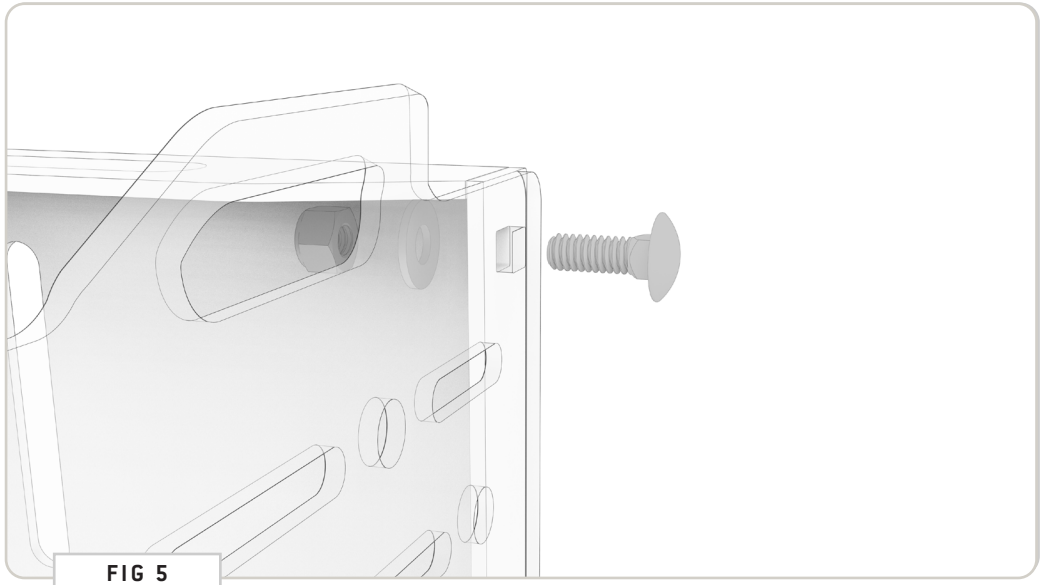

FIG 5

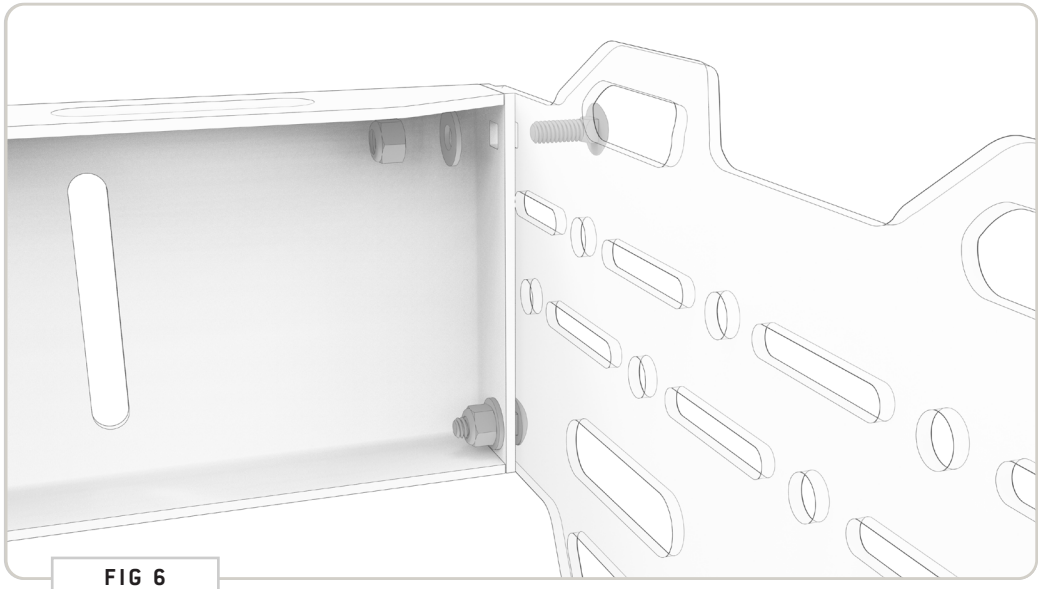

FIG 6

**TOOLS REQUIRED FOR THIS STEP:** + 7/16" WRENCH OR SOCKET

## STEP | 02 BOX TOPPER ASSEMBLY

**2.3 Attach Front Panel:** Repeat previous step for the **Front Panel (FIG 7).**

**2.4 Attach Foam Gaskets:** The **Rear Storage Box Topper Panels** may or may not have foam gaskets pre-installed. Attach the included **Foam Gaskets** to the bottom of the **Front and Rear Panels** to avoid rubbing **(FIG 8)**.

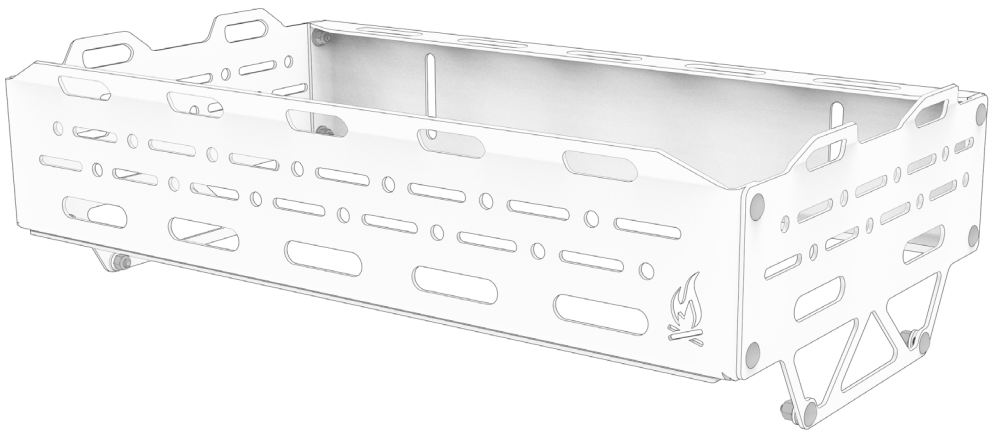

FIG 7

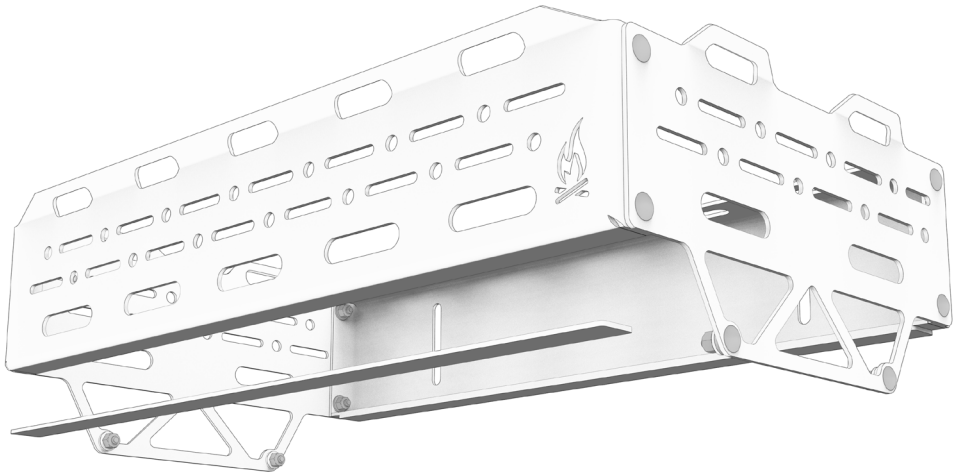

FIG 8

**TOOLS REQUIRED FOR THIS STEP:**

+ MARKER
+ POWER DRILL
+ 9/32" DRILL BIT

## STEP | 03 BOX TOPPER INSTALL

**3.1 Position Rear Storage Box Topper:** Set the assembled **Rear Storage Box Topper** on top of your **Rear Storage Box** and position it up tight against the **Rear Door Platform.**

**3.2 Mark Holes for Drilling:** Mark through the squared holes of the **Storage Box Topper** for drilling.

**3.3 Drill Holes:** Drill out holes using a 9/32" (or similar) sized Drill Bit **(FIG 10)**.

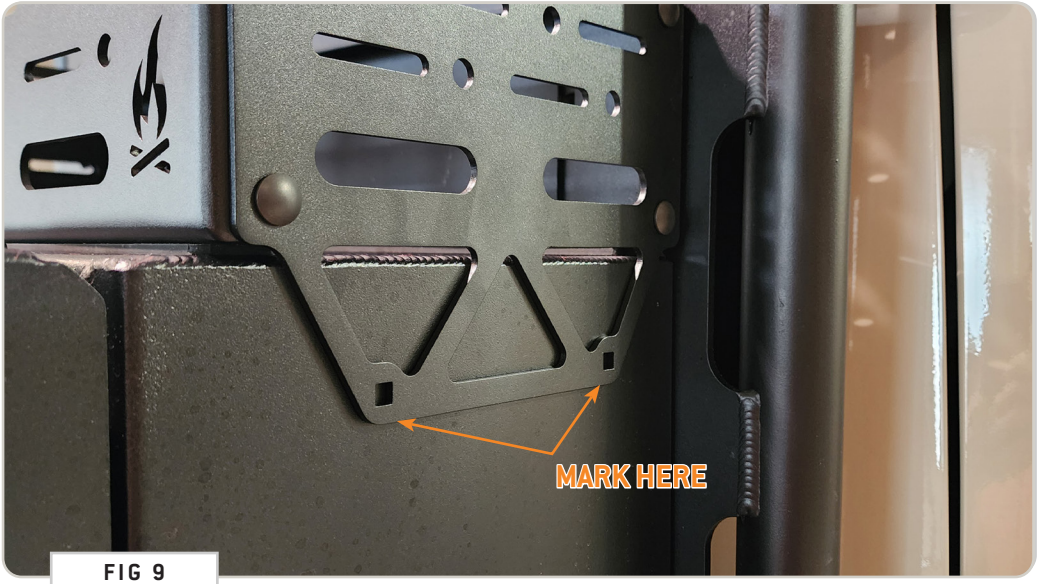


FIG 9

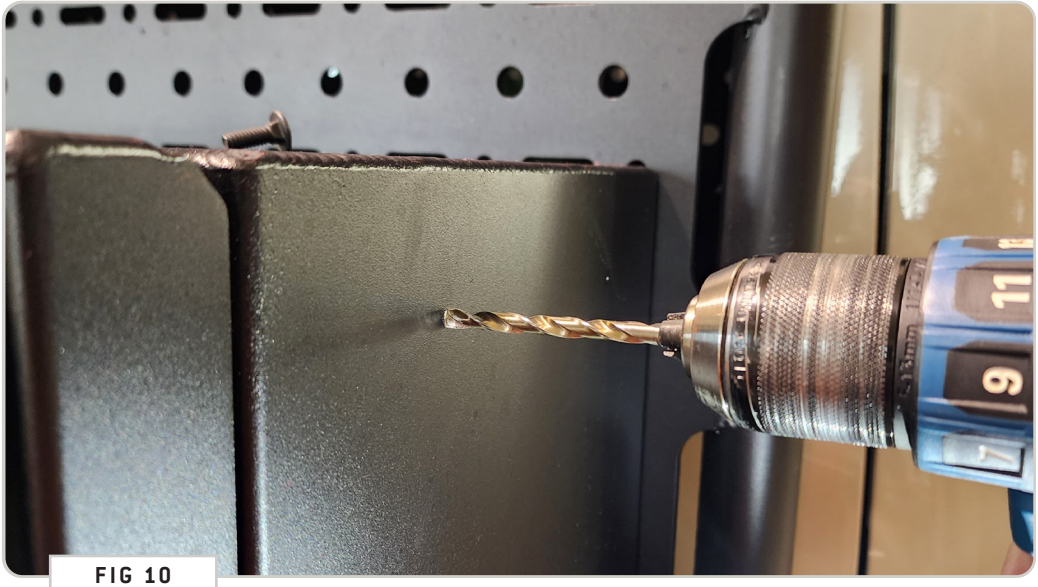

FIG 10

**TOOLS REQUIRED FOR THIS STEP:**

+ RATCHET
+ 9/16" SOCKET
+ 9/16" WRENCH

## STEP | 03 BOX TOPPER INSTALL

**3.5 Position Box Topper to Platform:** With help, lift and align top holes with hardware to the desired install location.

**NOTE -** *Bolting the **Rear Storage Box Topper** directly to the **Rear Door Platform** is optional, but can be done to prevent rattling.*

**3.4 Insert Bolts Through Mounting Holes (Optional):** Insert (1ea) **3/8-16 x 1" Flanged Hex Head Screws** to the mounting holes of your **Storage Box Topper (FIG 11)**.

**3.6 Loosely Secure Box Topper to Platform (Optional):** Reaching around the platform, attach (1ea) **3/8" Flat Washers** to the bolts and loosely thread on (1ea) **3/8" Nylon Lock Nuts (FIG 12)**.

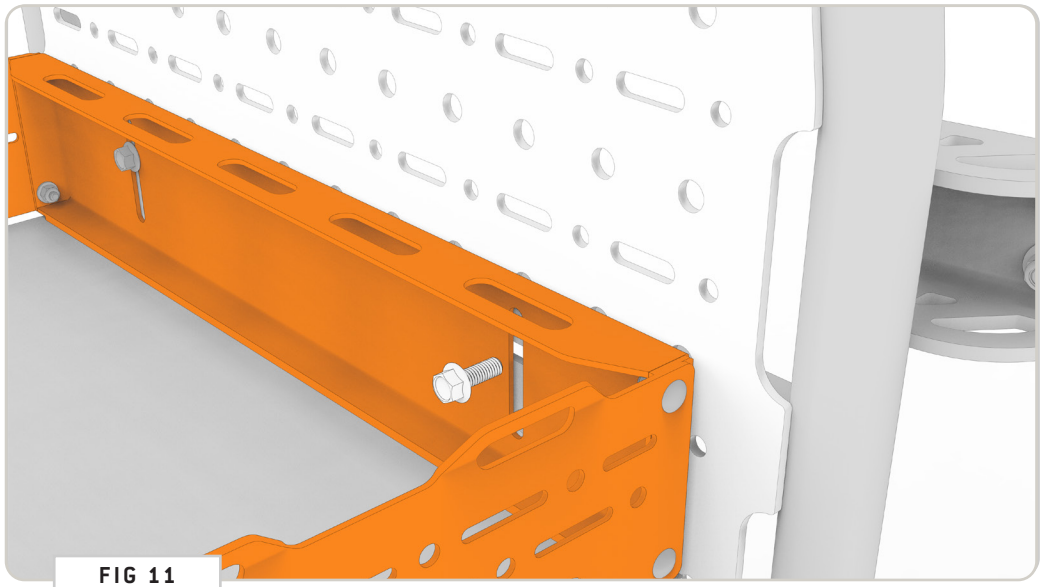

FIG 11

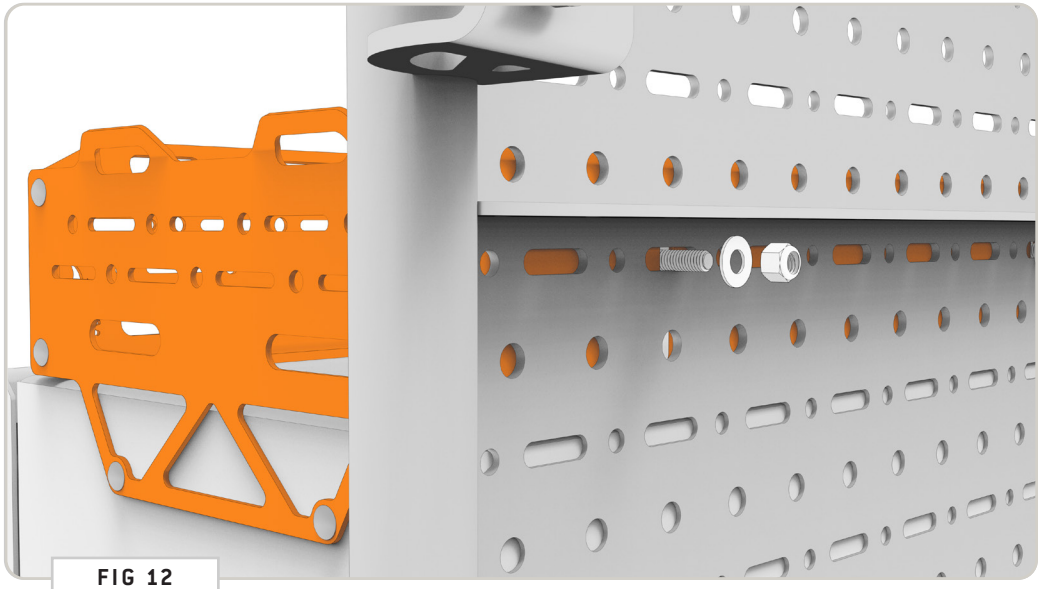

FIG 12

**TOOLS REQUIRED FOR THIS STEP:**

+ RATCHET
+ 7/16" SOCKET
+ 7/16" WRENCH

## STEP | 03 GEAR CAGE INSTALL

**3.7 Lower Mounting Holes:** Insert (1ea) **1/4-20x0.75 Carriage Bolts** through the lower mounting holes **(FIG 13)**.

**3.8 Secure Lower Mounting Holes:** Open the **Storage Box** and secure using a **1/4" Bonded Sealing Washer and Nylon Locknut (FIG 14).**

**NOTE -** *Make sure the rubber side of the sealing washer is against the surface of the Storage Box.*

**3.9 Tighten All Fasteners:** Verify positioning and tighten down hardware fully.

FIG 13

FIG 14

# GET OUT AND EXPLORE!

## + LEAVE US A REVIEW

Happy with your new FVC product? We would love to hear (and see) from you! Head to the product page and click "Leave Review." Add a short review and upload a few photos to be showcased on the product page.

## + SHARE YOUR PICS

We love seeing how our customers use their FVC products and following along with your adventures. Tag us in your photos with: @flatlinevanco or send them to us via email. We love posting customer pictures in our feed!

## + NEED ANY HELP?

If you are having any issues with your product, please reach out, and we will make it right. FVC is a company of van and outdoor enthusiasts that design and use our own products, so we want you to be as stoked on your new parts as we are!

@FLATLINEVANCO