INSTALLATION GUIDE

PROMASTER VAN PASSENGER FLOOR RISER COMPARTMENT

PM1001B

TOOLS REQUIRED (NOT INCLUDED)

+ None! This is a 100% tool-free installation.

INSTALL INFO

TIME TO INSTALL THIS PRODUCT: 5 MINUTES

BEFORE YOU START

Please inspect the product and packaging upon delivery to ensure there are no issues and that all parts and hardware are accounted for.

Contact us ASAP if anything is missing at: support@flatlinevanco.com

BEFORE YOU START

All Flatline Van Co products must be properly assembled and secured before attaching to your vehicle. Improper attachment could result in an automobile accident, and could cause serious bodily injury or death to you or to others involved. You are responsible for assembling and securing Flatline Van Co products to your vehicle, checking the mounting points and attachments prior to use, and regularly inspecting the products for wear and or damage. We always recommend you use a professional to install any aftermarket accessories to your vehicle. If you have no mechanical experience and are not thoroughly familiar with the installation procedures, you must have the product installed by a professional installer or other qualified persons. The responsibility is yours and must be taken seriously for everyone's safety.

PACKAGE CONTENTS

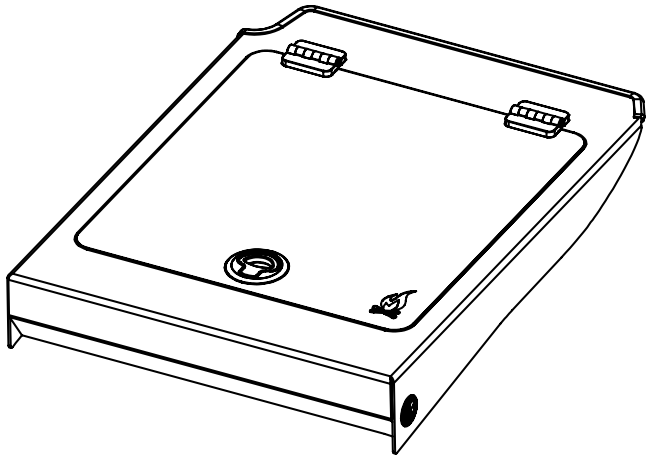

PROMASTER VAN PASSENGER FOOT RISER

QTY: 1

INSTALL

TOOLS REQUIRED FOR THIS STEP:

STEP | 01 PREP AND INSTALL RISER

This riser is designed for a perfect fit and requires no modification to your van.

1.1 Prepare the Area: Ensure the passenger side floor area in front of the seat base is clean and clear of any debris **(FIG 1)**.

NOTE - *The **Promaster Passenger Floor Riser Compartment** is only tested for use without floor mats.*

1.2 Orient the Riser: Orient the **Riser** with the front, right-side edge pointed in below the glove box **(FIG 2)**.

1.3 Set in Place: Slightly rotate the riser toward the driver's side of the van while lowering it into position within the footwell. Slide it back firmly until the gasket makes contact against the front of the seat base **(FIG 3-4)**.

1.4 Check Fit: That's it! Your riser is now securely in place.

FIG 1

FIG 2

FIG 3

FIG 4

INSTALL

TOOLS REQUIRED FOR THIS STEP:

STEP | 02 OPERATION AND USES

Your new riser doubles as a convenient, hidden storage box.

To Open: Simply lift the lid using the latch along the front edge of the riser **(FIG 5)**.

To Close: Lower the lid until it sits flush and secure **(FIG 6)**.

NOTE - *The storage compartment is perfect for stowing recovery gear, tools, shoes, or other essentials. See the dimensional graphics in **FIG 7** for the overall size of the riser and the inner compartment.*

FIG 5

FIG 6

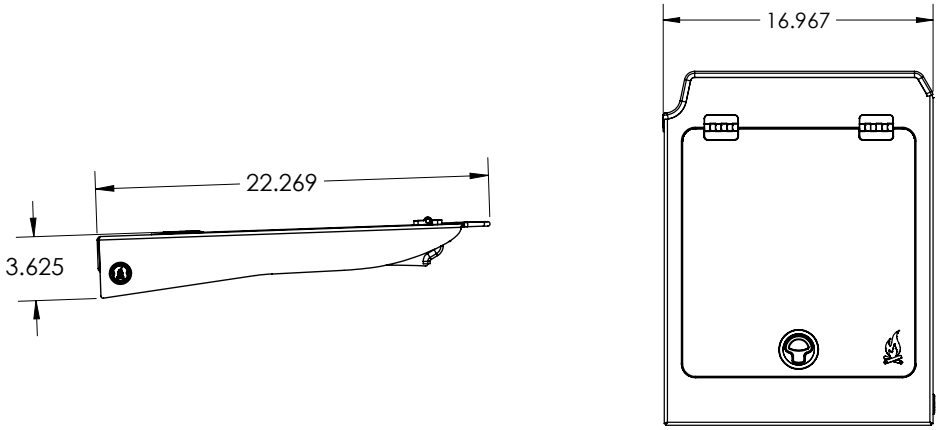

FIG 7

GET OUT AND EXPLORE!

+ LEAVE US A REVIEW

Happy with your new FVC product? We would love to hear (and see) from you! Head to the product page and click "Leave Review." Add a short review and upload a few photos to be showcased on the product page.

+ SHARE YOUR PICS

We love seeing how our customers use their FVC products and following along with your adventures. Tag us in your photos with: @flatlinevanco or send them to us via email. We love posting customer pictures in our feed!

+ NEED ANY HELP?

If you are having any issues with your product, please reach out, and we will make it right. FVC is a company of van and outdoor enthusiasts that design and use our own products, so we want you to be as stoked on your new parts as we are!

@FLATLINEVANCO